ECE408/CS483/CSE408 Fall 2024

Applied Parallel Programming

Lecture 19
GPU as part of the PC Architecture

© David Kirk/NVIDIA and Wen-mei W. Hwu, 2007-2018
ECE408/CS483/CSE408, ECE 498AL, University of Illinois, Urbana-Champaign

Course Reminders

- Lab 8
  - due next week
- Project PM 2
  - due this Friday
- Project PM 3
  - due in a few weeks
- MT2
  - December 10th

11	11/5/24	Lecture 19	GPU Systems Architecture	
	11/7/24	Lecture 20	Tasks Parallelism and Asynchronous Data Transfer	Kirk & Hwu: Chapter 18
	11/8/24	PM2 due	Project Milestone 2 Code & Report	
12	11/12/24	Lecture 21	Other Accelerations APIs	
	11/14/24	in-class Guest Lecture	*Guest lecture by Vikram Mailthody, NVIDIA*	
	11/15/24	Lab 8 due	Sparse Matrix Multiplication	
13	11/19/24	in-class Lecture 22	*Guest lecture by Sanjay Patel, NVIDIA* Tensor Processing APIs	NVIDIA Technical Blog CUDA PG: Warp Matrix Functions
	11/21/24	Guest Lecture by Jeff Larkin, NVIDIA	No More Porting! Programming GPUs with C++, Fortran, and Python. (recording on MediaSpace)	
Fall Break				
14	12/3/24	in-class Guest Lecture	*Guest lecture by Alex Settle, NVIDIA*	
	12/5/24	Lecture 23	Course Retrospective	
	12/6/24	PM3 due	Project Milestone 3 Code & Report	
15	12/10/24	Midterm 2		
	12/13/24	Project Competition due	Project Competition	

© David Kirk/NVIDIA and Wen-mei W. Hwu, 2007-2018
ECE408/CS483/CSE408, ECE 498AL, University of Illinois, Urbana-Champaign

Objectives

- To understand the impact of data transfers on performance when using a GPU as a co-processor
  - speeds and feeds of traditional CPU
  - speeds and feeds when employing a GPU

- To develop a knowledge base for performance tuning for modern GPUs

© David Kirk/NVIDIA and Wen-mei W. Hwu, 2007-2018
ECE408/CS483/CSE408, ECE 498AL, University of Illinois, Urbana-Champaign

Review: Canonical CUDA Program Structure

- Global variables declaration
- Kernel functions
  - __global__ void kernelOne(…)

- main () // host code
  - allocate memory space on the device – cudaMalloc(&d_GlblVarPtr, bytes)
  - transfer data from host to device – cudaMemcpy(d_GlblVarPtr, h_Gl…)
  - execution configuration setup
  - kernel call – kernelOne<<<execution configuration>>>(args…);
  - transfer results from device to host – cudaMemcpy(h_GlblVarPtr,…)

  - optional: compare against golden (host computed) solution

repeat
as needed

© David Kirk/NVIDIA and Wen-mei W. Hwu, 2007-2018
ECE408/CS483/CSE408, ECE 498AL, University of Illinois, Urbana-Champaign

Bandwidth: The Gravity of Modern Computer Systems

Bandwidth between key components ultimately **dictates system performance**

- **Especially for GPUs** processing large amounts of data.
- Tricks like buffering, reordering, caching can temporarily defy the rules in some cases.
- Ultimately, performance falls back to what the "speeds and feeds" dictate.

© David Kirk/NVIDIA and Wen-mei W. Hwu, 2007-2018
ECE408/CS483/CSE408, ECE 498AL, University of Illinois, Urbana-Champaign

Classic (Historical) PC Architecture

- Northbridge connects 3 components that must communicate at high speed
  - CPU, DRAM, video
  - Video needs first-class access to DRAM
  - Previous NVIDIA cards are connected to AGP, up to 2 GB/s transfers
- Southbridge serves as a concentrator for slower I/O devices

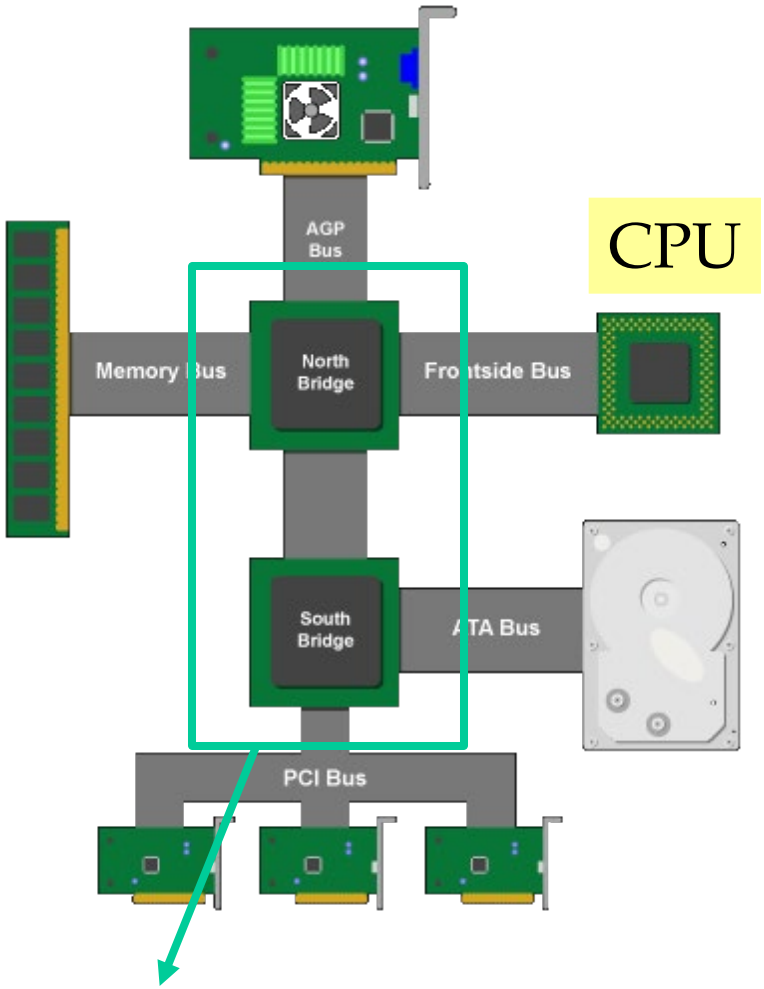

© David Kirk/NVIDIA and Wen-mei W. Hwu, 2007-2018
ECE408/CS483/CSE408, ECE 498AL, University of Illinois, Urbana-Champaign

(Original) PCI Bus Specification

- Peripheral Component Interconnect (PCI)
- Connected to the South Bridge
  - Originally 33 MHz, 32-bit wide, 132 MB/second peak transfer rate
  - Later, 66 MHz, 64-bit, 528 MB/second peak
  - Upstream bandwidth remain slow for device (~256MB/s peak)
  - **Shared bus with arbitration**
    - Winner of arbitration becomes bus master and can connect to CPU or DRAM through the southbridge and northbridge

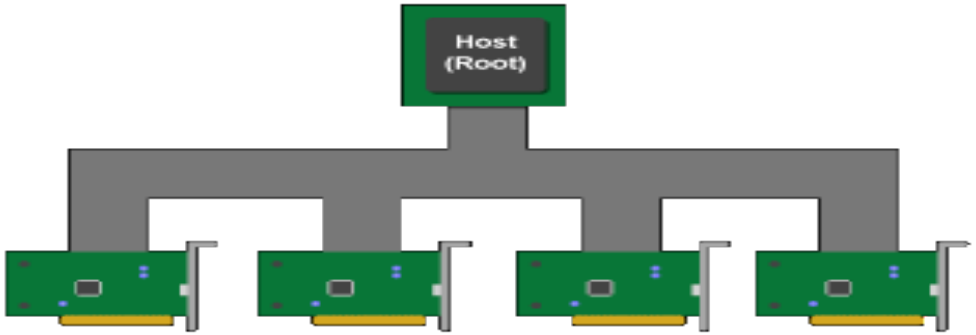

© David Kirk/NVIDIA and Wen-mei W. Hwu, 2007-2018
ECE408/CS483/CSE408, ECE 498AL, University of Illinois, Urbana-Champaign

PCI as Memory Mapped I/O

- PCI device registers are mapped into the CPU's physical address space
  - Accessed through loads/stores (kernel mode)
- Addresses are assigned to the PCI devices at boot time
  - All devices listen for their addresses

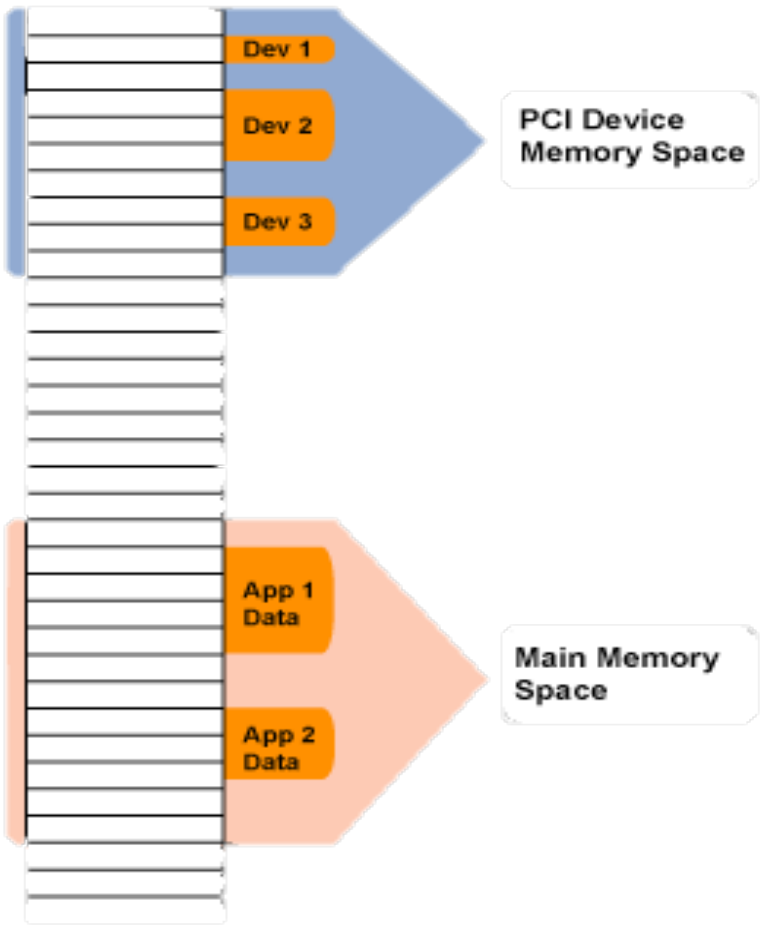

© David Kirk/NVIDIA and Wen-mei W. Hwu, 2007-2018
ECE408/CS483/CSE408, ECE 498AL, University of Illinois, Urbana-Champaign

PCI Express (PCIe)

switched, point-to-point connection

- each card has dedicated "link" to the central switch, with no arbitration
- packet switches: messages form virtual channel
- prioritized packets for QoS (such as for real-time video streaming)

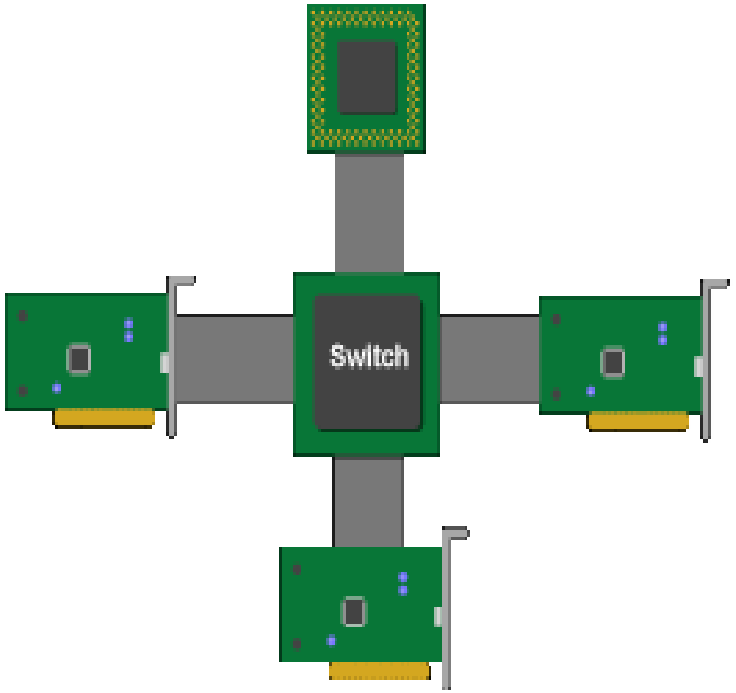

© David Kirk/NVIDIA and Wen-mei W. Hwu, 2007-2018
ECE408/CS483/CSE408, ECE 498AL, University of Illinois, Urbana-Champaign

PCIe Generations

- Within a generation, number of lanes in a link can be scaled
  - using distinct physical channels (more bits / wider transfers)
  - $\times 1$, $\times 2$, $\times 4$, $\times 8$, $\times 16$, $\times 32$, …
- Each new generation aims to double the speed
  - Current generation is PCIe 5.0, however it is supported only on newest systems, e.g., IBM Power10, Intel's 12th, 13th, and 14th generation Core processors, and AMD Ryzen 7000 processors
    - 32GT/s
  - PCIe 4.0 is supported on many AMD, Intel, and IBM systems
  - However, PCIe Gen. 3 is still widely used

© David Kirk/NVIDIA and Wen-mei W. Hwu, 2007-2018
ECE408/CS483/CSE408, ECE 498AL, University of Illinois, Urbana-Champaign

PCIe Gen 3 Links and Lanes

- Each link consists of one or more lanes
  - Each lane is 1-bit wide (4 wires, each 2-wire pair can transmit 8Gb/s in one direction)
    - 2-wire pair is used for differential signaling
    - Upstream and downstream simultaneous and symmetric
  - Each Link can combine 1, 2, 4, 8, 12, 16 lanes- x1, x2, etc.
- Each byte data is **128b/130b** encoded into 130 bits with equal number of 1's and 0's
  - Thus, the net data rates are 985 MB/s (x1) 1.97 GB/s (x2), 3.94 GB/s (x4), 7.9 GB/s (x8), 15.8 GB/s (x16), each way

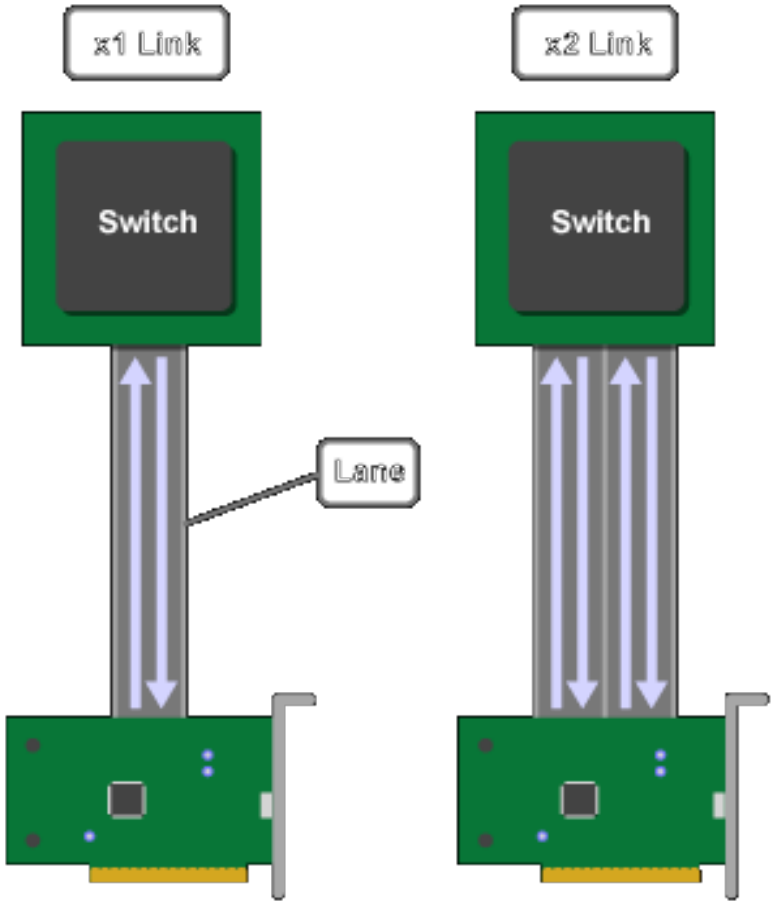

© David Kirk/NVIDIA and Wen-mei W. Hwu, 2007-2018
ECE408/CS483/CSE408, ECE 498AL, University of Illinois, Urbana-Champaign

Foundation: 8/10 bit encoding

- Goal is to maintain DC balance while have sufficient state transition for clock recovery
- The difference of 1s and 0s in a 20-bit stream should be ≤ 2
- There should be no more than 5 consecutive 1s or 0s in any stream
- 00000000, 00000111, 11000001 bad
- 01010101, 11001100 good
- Find 256 good patterns among 1024 total patterns of 10 bits to encode an 8-bit datum
- a 20% overhead

© David Kirk/NVIDIA and Wen-mei W. Hwu, 2007-2018
ECE408/CS483/CSE408, ECE 498AL, University of Illinois, Urbana-Champaign

Current: 128/130 bit encoding

- Same goal: maintain DC balance while have sufficient state transition for clock recovery
- 1.5% overhead instead of 20%
- Scrambler function: long runs of 0s, 1s vanishingly small
- Instead of guaranteed run length of 8/10b
- At least one bit shift every 66 bits

© David Kirk/NVIDIA and Wen-mei W. Hwu, 2007-2018
ECE408/CS483/CSE408, ECE 498AL, University of Illinois, Urbana-Champaign

Patterns Contain Many 0s and 1s

A question for fun:

- if we need **2^{128} code words**
- **chosen from** all 2^{130} **130-bit patterns**
- **how many 0s/1s** must we consider including?

Answer: 63-67 (of either type)

Thus 128b/130b code words are pretty well-balanced, and have lots of 0-1 transitions (for clock recovery).

© David Kirk/NVIDIA and Wen-mei W. Hwu, 2007-2018
ECE408/CS483/CSE408, ECE 498AL, University of Illinois, Urbana-Champaign

Recent PCIe PC Architecture

PCIe forms the interconnect backbone within PC.

Northbridge and Southbridge are PCIe switches.

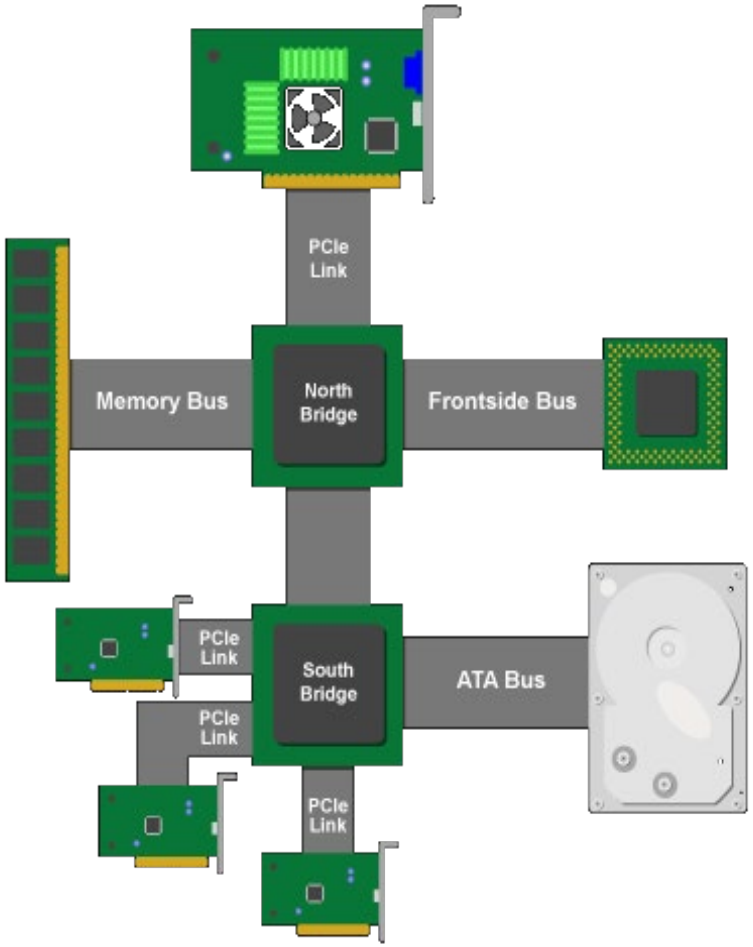

Source: Jon Stokes, PCI Express: An Overview (http://arstechnica.com/articles/paedia/hardware/pcie.ars)

© David Kirk/NVIDIA and Wen-mei W. Hwu, 2007-2018
ECE408/CS483/CSE408, ECE 498AL, University of Illinois, Urbana-Champaign

Recent PCIe PC Architecture

How is PCI supported?

- Need a PCI-PCIe bridge, which is
- sometimes included as part of Southbridge, or
- can add as a separate PCIe I/O card.

Current systems integrate PCIe controllers directly on chip with CPU.

Source: Jon Stokes, PCI Express: An Overview (http://arstechnica.com/articles/paedia/hardware/pcie.ars)

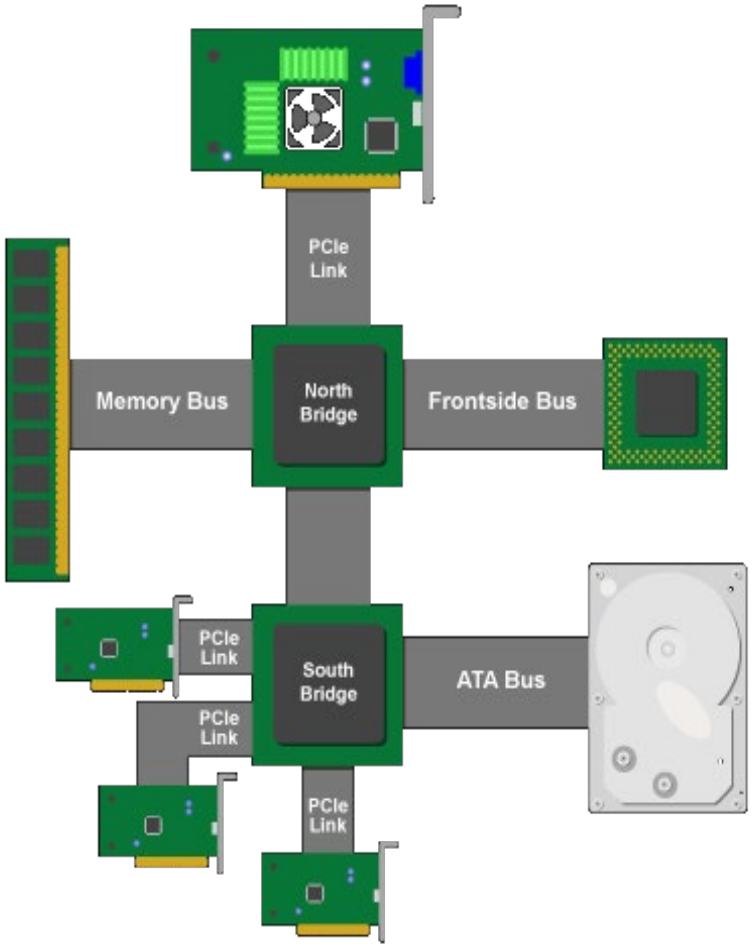

© David Kirk/NVIDIA and Wen-mei W. Hwu, 2007-2018
ECE408/CS483/CSE408, ECE 498AL, University of Illinois, Urbana-Champaign

Modern Intel PCIe PC Architecture

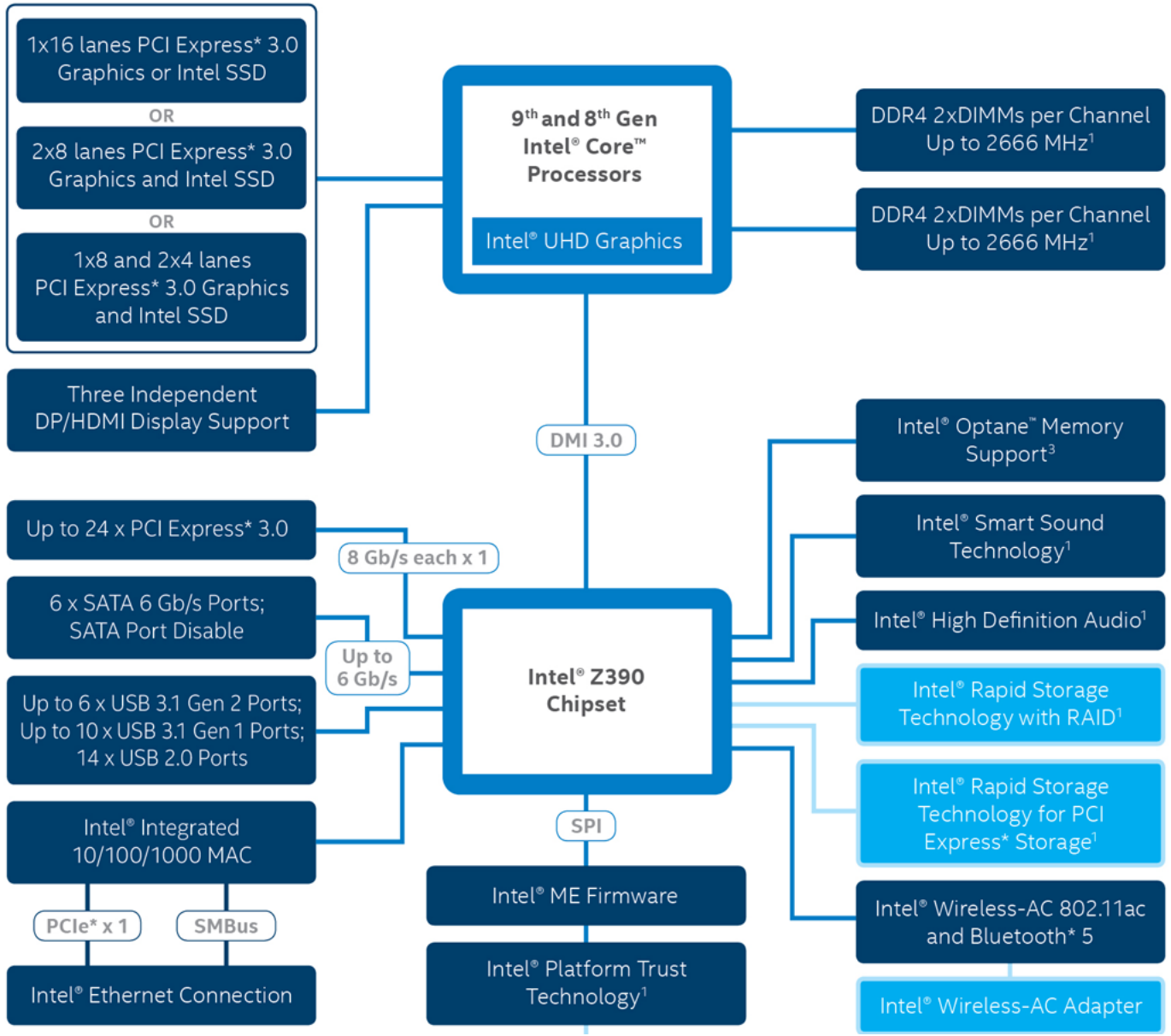

https://www.intel.com/content/www/us/en/products/chipsets/desktop-chipsets/z390.html

Modern AMD PCIe PC Architecture

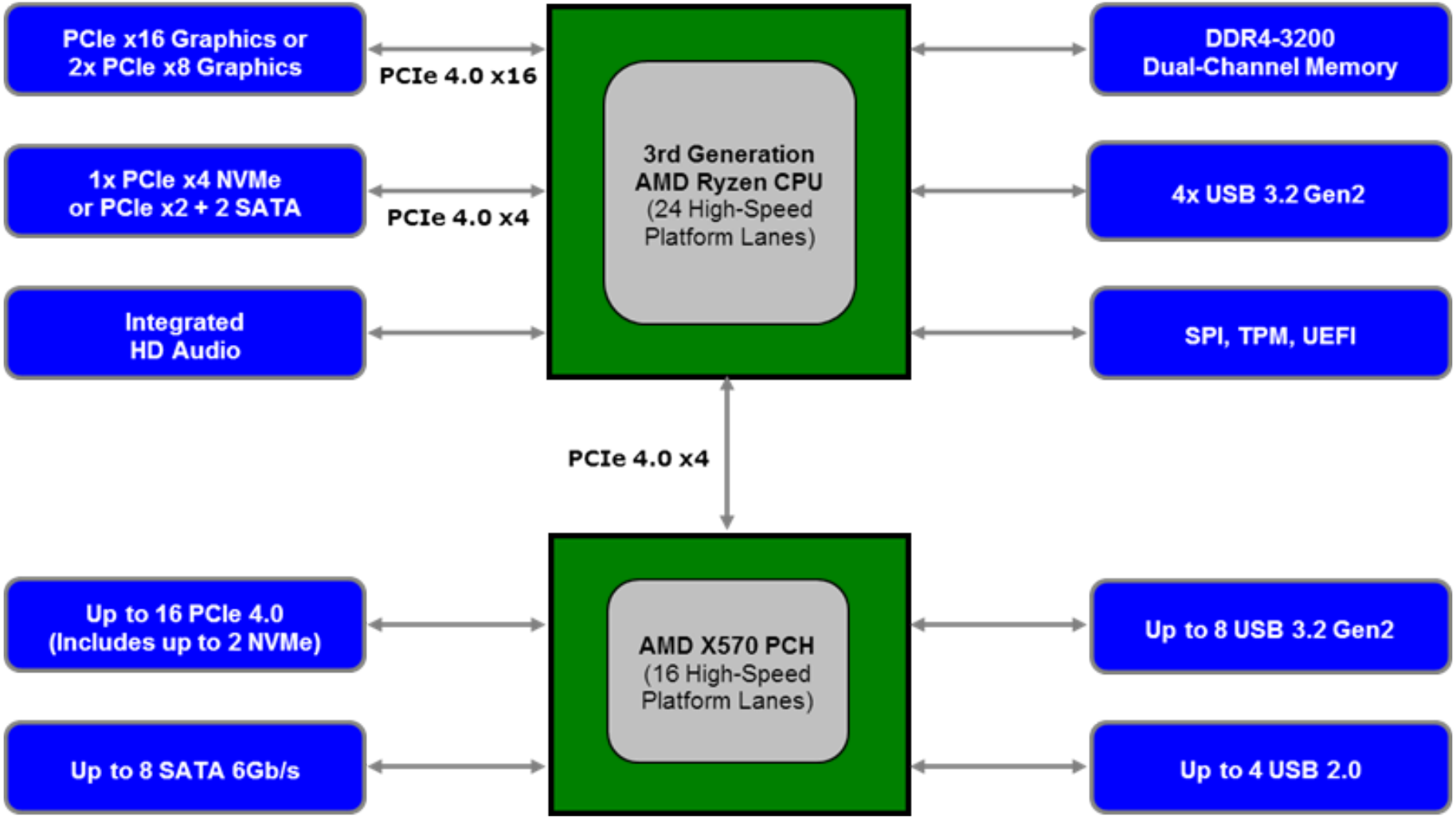

https://www.tomshardware.com/news/amd-x570-x470-chipset-pcie-4.0,39651.html

GeForce GTX 1080 (Pascal) GPU Consumer Card Details

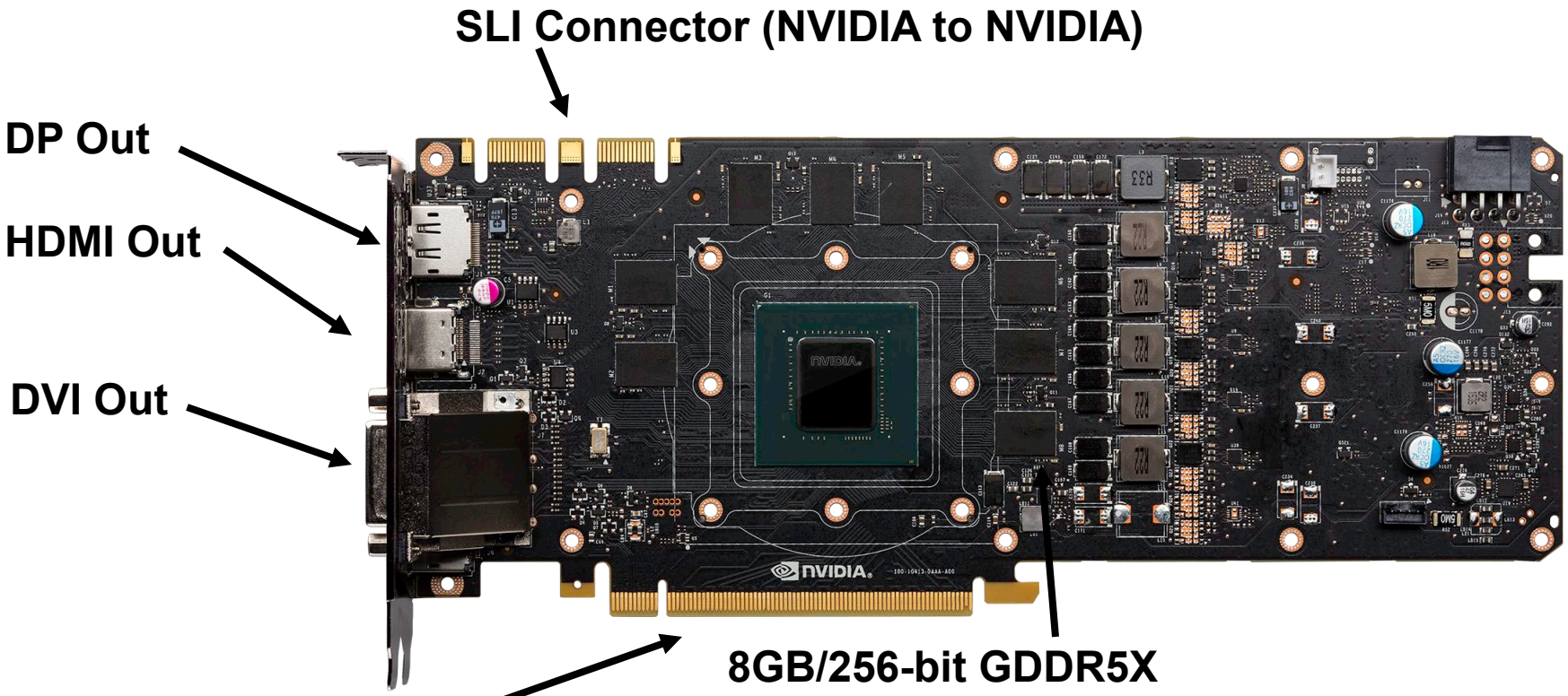

8GB/256-bit GDDR5X

1.25 GHz mem clock
2.5 GHz write clock w/ QDR = 10Gb/s/pin
256 bit bus = 320 GB/s
8 pieces of 8Gb (16 Mb x 32 x 16 banks)

© David Kirk/NVIDIA and Wen-mei W. Hwu, 2007-2018
ECE408/CS483/CSE408, ECE 498AL, University of Illinois, Urbana-Champaign

NVIDIA H100 (Hopper) PCIe GPU

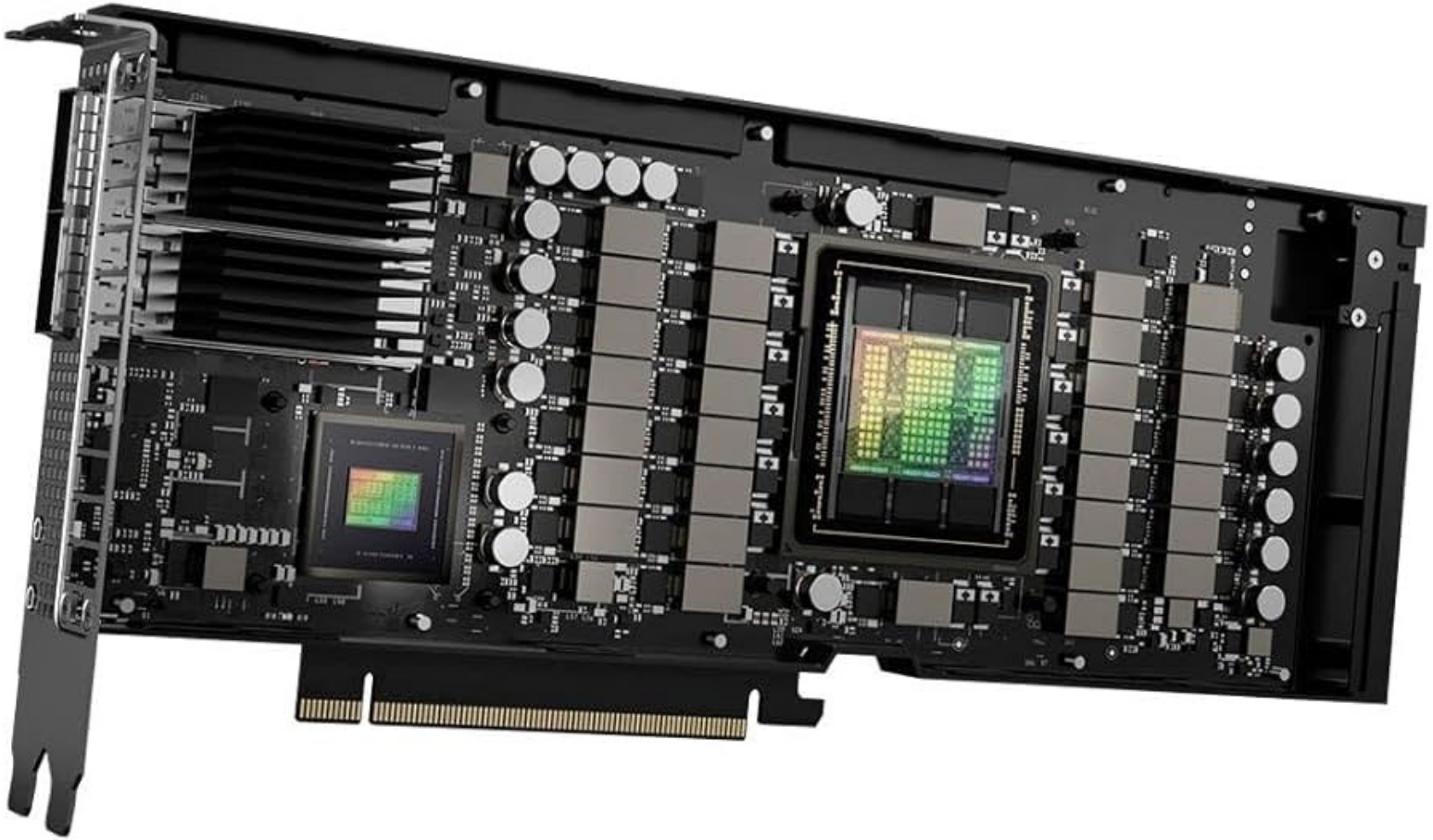

80GB HBM2e, 5120-Bit, PCIe 5.0

© David Kirk/NVIDIA and Wen-mei W. Hwu, 2007-2018
ECE408/CS483/CSE408, ECE 498AL, University of Illinois, Urbana-Champaign

PCIe Data Transfer using DMA

DMA (Direct Memory Access) is used to fully utilize the bandwidth of an I/O bus

- DMA uses physical address for source and destination
- Transfers a number of bytes requested by OS
- Needs pinned memory

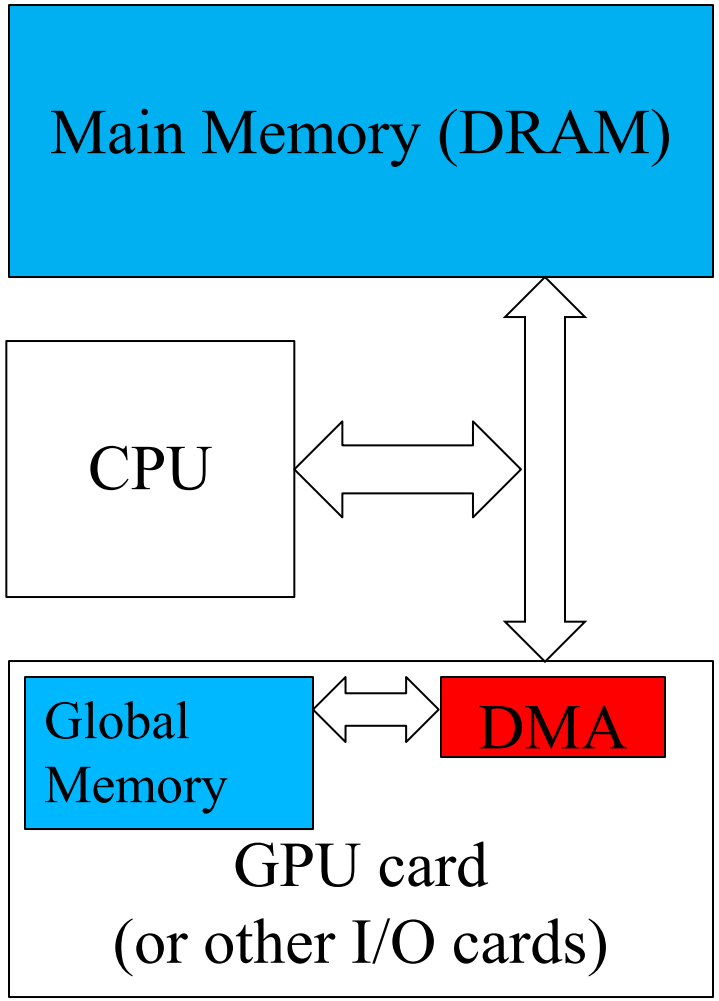

© David Kirk/NVIDIA and Wen-mei W. Hwu, 2007-2018
ECE408/CS483/CSE408, ECE 498AL, University of Illinois, Urbana-Champaign

Pinned Memory

- DMA uses physical addresses
- The OS could accidentally page out the data that is being read or written by a DMA and page in another virtual page into the same location
- Pinned memory cannot be paged out
- If a source or destination of a cudaMemcpy in the host memory is not pinned, it needs to be first copied to a pinned memory – extra overhead
- cudaMemcpy is much faster with pinned host memory source or destination

© David Kirk/NVIDIA and Wen-mei W. Hwu, 2007-2018
ECE408/CS483/CSE408, ECE 498AL, University of Illinois, Urbana-Champaign

Allocate/Free Pinned Memory (a.k.a. Page Locked Memory)

- cudaHostAlloc()
  - Three parameters
  - Address of pointer to the allocated memory
  - Size of the allocated memory in bytes
  - Option – use cudaHostAllocDefault for now

- cudaFreeHost()
  - One parameter
  - Pointer to the memory to be freed

© David Kirk/NVIDIA and Wen-mei W. Hwu, 2007-2018
ECE408/CS483/CSE408, ECE 498AL, University of Illinois, Urbana-Champaign

Using Pinned Memory

- Use the allocated memory and its pointer the same way those returned by malloc();
- The only difference is that the allocated memory cannot be paged by the OS
- The cudaMemcpy function should be about 2x faster with pinned memory
- Pinned memory is a limited resource whose over-subscription can have serious consequences

© David Kirk/NVIDIA and Wen-mei W. Hwu, 2007-2018
ECE408/CS483/CSE408, ECE 498AL, University of Illinois, Urbana-Champaign

NVIDIA Ampere GPUs AI Accelerators

- Third-generation Tensor cores
- Multi-instance GPU (MIG)
- Third-generation NVLink
  - GPU-to-GPU direct bandwidth to 600 gigabytes per second (GB/s), almost 10X higher than PCIe Gen4.
- Structural Sparsity
- Second-generation RT Cores
  - Photorealistic rendering of movie content
- Smarter and faster memory
  - 1.6 terabytes per second (TB/sec) of memory bandwidth!
- Converged acceleration at the edge
  - Combination of the NVIDIA Ampere architecture and the NVIDIA Mellanox® ConnectX-6® Dx SmartNIC

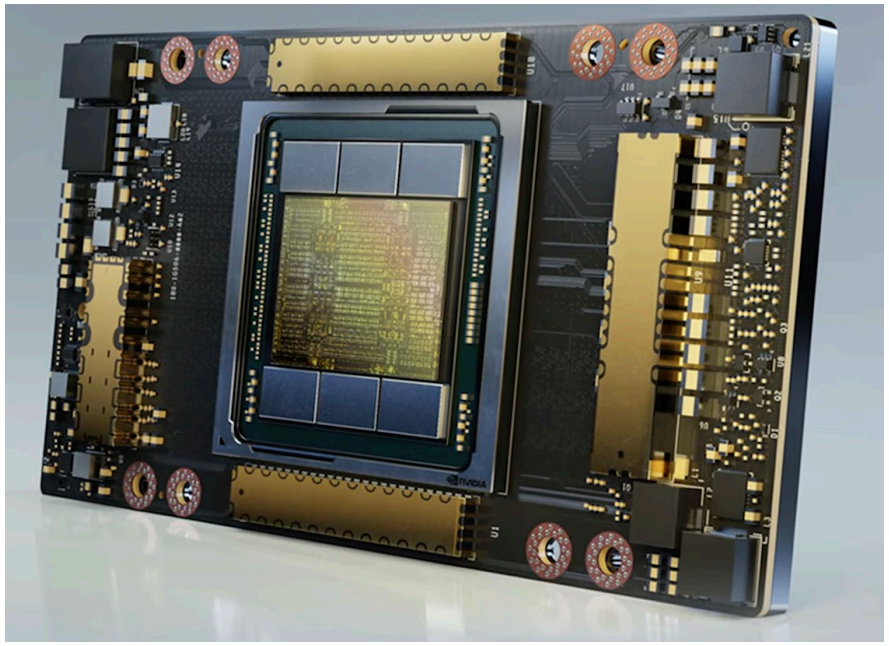

© David Kirk/NVIDIA and Wen-mei W. Hwu, 2007-2018
ECE408/CS483/CSE408, ECE 498AL, University of Illinois, Urbana-Champaign

NVLink: Multi-GPU and GPU-CPU Interconnect

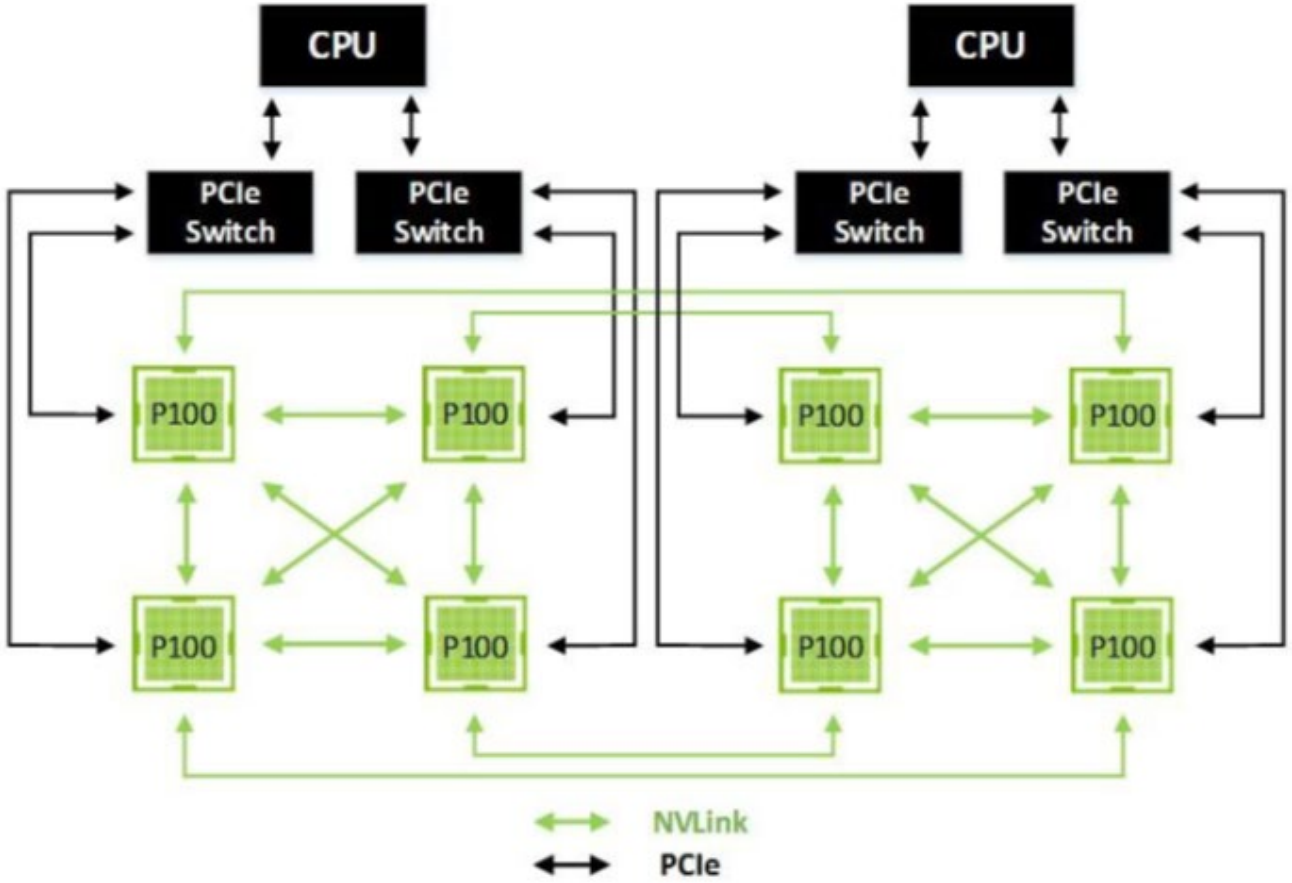

- NVLink Connecting Eight Tesla P100 Accelerators in a Hybrid Cube Mesh Topology.
- GPU-to-GPU data transfers at up to 160 Gigabytes/second of bidirectional bandwidth—5x the bandwidth of PCIe Gen 3 x16.

© David Kirk/NVIDIA and Wen-mei W. Hwu, 2007-2018
ECE408/CS483/CSE408, ECE 498AL, University of Illinois, Urbana-Champaign

IBM Power9 System

- 2 IBM Power9 CPUs.
- 1 CPU: 10 cores, 80 threads @4.02GHz, 256GB RAM.
- 4 NVIDIA Volta V100 GPUs (16GB).
- GPUs connected using NVLink2.0 Interconnect. (25GB/s per lane * 6 lanes = 150GB/s)

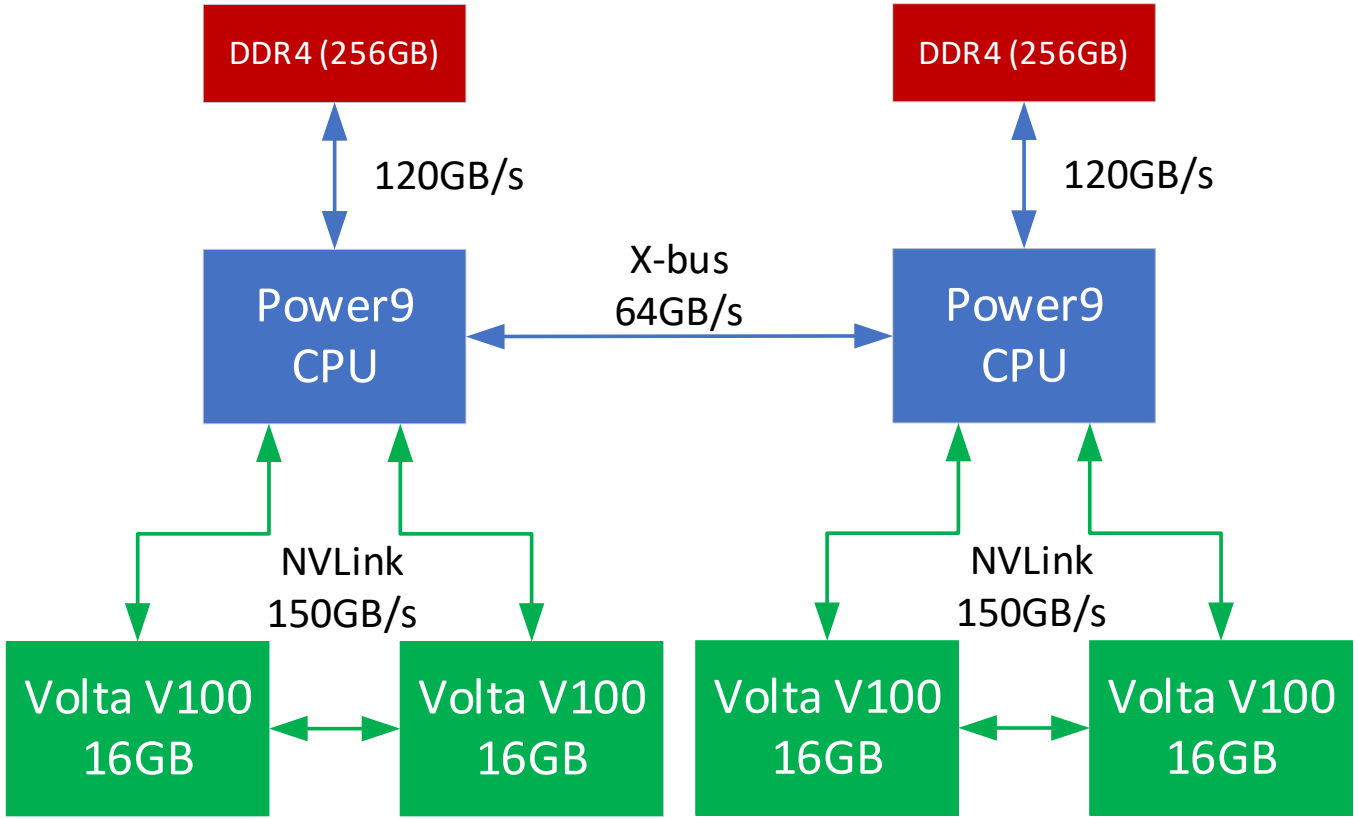

© David Kirk/NVIDIA and Wen-mei W. Hwu, 2007-2018
ECE408/CS483/CSE408, ECE 498AL, University of Illinois, Urbana-Champaign

Delta's NVIDIA A40 GPUs

GPU Memory	48 GB GDDR6 with error-correcting code (ECC)
GPU Memory Bandwidth	696 GB/s
Interconnect	NVIDIA NVLink 112.5 GB/s (bidirectional) PCIe Gen4: 64GB/s
NVLink	2-way low profile (2-slot)
Display Ports	3x DisplayPort 1.4*
Max Power Consumption	300 W
Form Factor	4.4" (H) x 10.5" (L) Dual Slot
Thermal	Passive

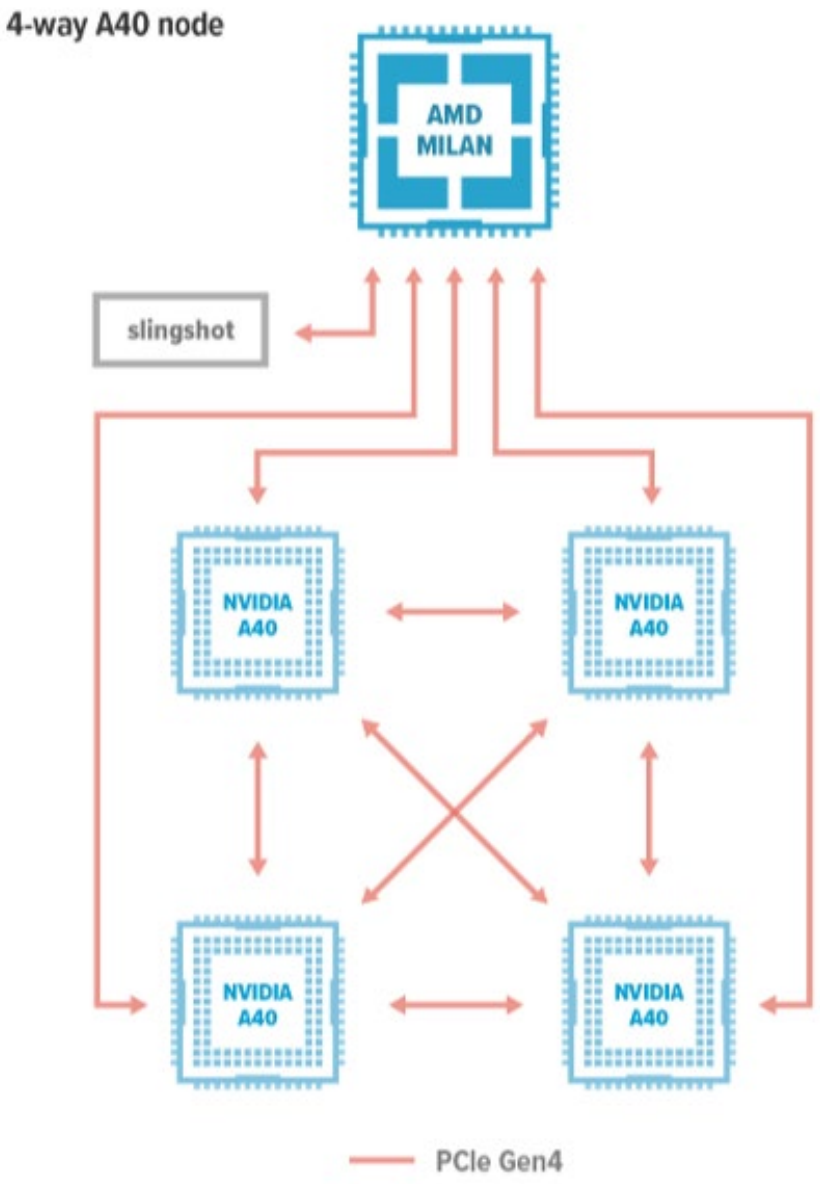

© David Kirk/NVIDIA and Wen-mei W. Hwu, 2007-2018
ECE408/CS483/CSE408, ECE 498AL, University of Illinois, Urbana-Champaign

Important Trends

- Knowing yesterday, today, and tomorrow
  - The PC world is becoming flatter
  - CPU and GPU are being fused together
  - Outsourcing of computation is becoming easier…

© David Kirk/NVIDIA and Wen-mei W. Hwu, 2007-2018
ECE408/CS483/CSE408, ECE 498AL, University of Illinois, Urbana-Champaign

ANY MORE QUESTIONS

© David Kirk/NVIDIA and Wen-mei W. Hwu, 2007-2018
ECE408/CS483/CSE408, ECE 498AL, University of Illinois, Urbana-Champaign

Problem Solving

- Q: The following table gives the SM limits for compute capability (CC) 1.3. Nvidia defines *occupancy* as the ratio of the number of warps per SM for a given kernel configuration divided by the device limit. In a GPU with CC 1.3, which kernel achieves the maximum occupancy?
- A: K2

	CC 1.3
Max warps per SM	32
Max blocks per SM	8
Shared memory per SM	16K
Registers per SM	16K
Max block size	512

kernel	blockDim	gridDim	Shared memory per block	Registers per block
K1	160	4096	7K	1K
K2	224	2048	8K	6K
K3	288	1024	10K	9K
K4	96	8192	4K	2K

© David Kirk/NVIDIA and Wen-mei W. Hwu, 2007-2018
ECE408/CS483/CSE408, ECE 498AL, University of Illinois, Urbana-Champaign